• POWER AND RELIABILITY
Suitable for use on doors weighing up to 150kg (120+120kg in the case of 2-leaf models) used for continuous duty

• RELIABLE OPERATION
Electronic torque, speed and slow-down management system. Technologically advanced, it enables fast, accurate and harmonious motion, producing an unbeatably reliable installation.

• SPEED OF INSTALLATION
Designed to assure shorter installation times, it features simple, innovative solutions to make sure the installation stage is entirely effortless. These include the WWP installation profile, which means less people are required to do the job (installation can be carried out even by one person on their own!) and the AUTOSET system via which all parameters required for operation can be set automatically.

• WHISPER-QUIET OPERATION
GUARANTEED TO LAST
The aluminium track ensures that the sliding system will continue to provide peak mechanical performance well into the future. The shock-absorbing profile minimizes the amount of vibration transmitted to the structure, practically eliminating noise in the process.

• INTUITIVE USE
Designed with the installer in mind, it features simple, intuitive adjustment devices that are easy to reach. At the same time, it provides unbeatable ease of use for the end user who - through the VISTA SEL selector - can configure the door by simply pressing a key, with no chance of making a mistake

• ELEGANCE AND FUNCTION
Smooth lines and small size are two of the distinguishing traits of the VISTA SEL automatic door.

• BUILT-IN RADIO-RECEIVER
With a CLONIX-series 433Mhz radio-receiver built in as standard, the door can be controlled with the T BOX numerical keypad, wall and/or desktop RB button or MITTO remote controls.

VISTA SEL
Mode selector with option of restricted personnel access. A magnetic key can actually be used to lock out or enable its use.

TECHNICAL FEATURES

GENERIC FEATURES		SPECIFIC FEATURES	
		VISTA SL1	VISTA SL2
POWER SUPPLY	230V 50Hz		
POWER INPUT	230 W		
OPERATING CYCLE	Continuous		
MINIMUM OPENING WIDTH		75 cm	80 cm
MAXIMUM OPENING WIDTH		255 cm	290 cm
MAXIMUM LEAF WEIGHT		150 kg	120+120 kg
MAXIMUM SPEED OF MOVEMENT		50 cm/sec	100 cm/sec
HEADER SIZE	166x155 mm		
PARTIAL OPENING	10-70% opening width		
ANTI-CRUSH	encoder and microprocessor		
OPERATING TEMPERATURE RANGE	0°/55°C inside enclosure		
RUNNER HEIGHT ADJUSTMENT	Up to 16 mm		

AUTOMATIC ADJUSTMENTS

- Acceleration
- Brake
- Opening deceleration distance
- Closing deceleration distance
- Opening slow-down distance
- Closing slow-down distance
- Opening speed
- Closing speed
- Opening torque
- Closing torque
- Safety operation testing

VISTA SEL SELECTOR FUNCTIONS

- Programming unrestricted or protected by magnetic key
- Activate internal radar
- Activate external radar
- Activate internal and external radars
- Deactivate radar
- Normal mode
- Door closed at night
- Door closed by day
- Total opening
- Partial opening
- Partial open
- Partial lock opening

ALARM CONFIGURATION

EMERGENCY INPUT
- Opens and locks the door if NO
- Closes and locks the door if NO
- Opens and locks the door if NC
- Closes and locks the door if NC

DOOR STATE OUTPUT
- Output active if door is not completely closed
- Output active if door is not completely open

ALARM OUTPUT
- Photocell triggered for longer than T.Alarm time
- Obstacle detected
- Attempt to force open closed door

ADJUSTABLE FUNCTIONS

- Automatic closing (0-60 sec)
- Time-to-clear (1-99 sec)
- Partial opening (10-70%)
- Partial lock opening (3-30 cm)
- Alarm time (1-90 sec)
- Acceleration (1-10)
- Brake (1-10)
- Opening deceleration distance (10-70 cm)
- Closing deceleration distance (10-70 cm)
- Opening slow-down distance (10-20 cm)
- Closing slow-down distance (10-20 cm)
- Opening speed (1-99%)
- Closing speed (1-99%)
- Opening torque (1-99%)
- Closing torque (1-99%)
- Zones (0-127)
- Door mode (0-6)
- Radar enabling (0-2)
- Emergency input (0-3)
- Buzzer (0-3)
- Door output (0-1)
- Lock type (0-5)

ELECTRIC LOCK MODE

- Motor always locked
- Motor locked with door closed only
- Motor locked every time stops
- Motor locked every time stops for more than 20 seconds
- Motor reacts with 10N to attempted opening
- Motor reacts with maximum force to attempted opening

COMPONENTS AND ACCESSORIES

VISTA SEL - D113722
Mode selector

PROXIMA - P111326
programmer

BBV - P111442
Emergency batteries

Mains supply
transformer

T-BOX - P121019
Wireless numerical keypad

24Vdc gearbox

VISTA ELA - N733415
Kit with elastic for
emergency open

Track vibration damper
profile

Belt adjustment
system

RB - P121016
Wireless wall button

Service and power
cable guide system

WMP
Mounting profile

ERV - N733408
Electric lock

ARIA
Control unit

COMPASS RING - D110914
Proximity keyring

COMPASS SLIM - D113704
Proximity reader

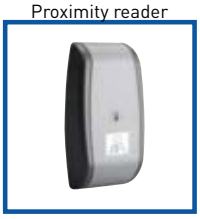

DOORS AND COVERS RANGE

CODE	DESCRIPTION	POWER SUPPLY	B(mm)	A(mm)	L(mm)	ANODIZED CARTER
VISTA 1 - LEFT						
P960502 00002	**VISTA SL-107**	24 V	750	800	1600	**P111411 00002**
P960503 00002	**VISTA SL-108**	24 V	850	900	1800	**P111412 00002**
P960504 00002	**VISTA SL-109**	24 V	950	1000	2000	**P111414 00002**
P960505 00002	**VISTA SL-110**	24 V	1050	1100	2200	**P111415 00002**
P960506 00002	**VISTA SL-111**	24 V	1150	1200	2400	**P111416 00002**
P960507 00002	**VISTA SL-112**	24 V	1250	1300	2600	**P111417 00002**
P960508 00002	**VISTA SL-113**	24 V	1350	1400	2800	**P111418 00002**
P960509 00002	**VISTA SL-114**	24 V	1450	1500	3000	**P111419 00002**
P960510 00002	**VISTA SL-115**	24 V	1550	1600	3200	**P111420 00002**
P960511 00002	**VISTA SL-116**	24 V	1650	1700	3400	**P111421 00002**
P960512 00002	**VISTA SL-117**	24 V	1750	1800	3600	**P111422 00002**
P960513 00002	**VISTA SL-119**	24 V	1950	2000	4000	**P111423 00002**
P960514 00002	**VISTA SL-121**	24 V	2150	2200	4400	**P111424 00002**
P960515 00002	**VISTA SL-123**	24 V	2350	2400	4800	**P111425 00002**
P960516 00002	**VISTA SL-125**	24 V	2550	2600	5200	**P111426 00002**
VISTA 2						
P960517 00002	**VISTA SL-208**	24 V	800	2X500	1900	**P111413 00002**
P960518 00002	**VISTA SL-209**	24 V	900	2X500	2000	**P111414 00002**
P960519 00002	**VISTA SL-210**	24 V	1000	2X550	2200	**P111415 00002**
P960520 00002	**VISTA SL-211**	24 V	1100	2X600	2400	**P111416 00002**
P960521 00002	**VISTA SL-212**	24 V	1200	2X650	2600	**P111417 00002**
P960522 00002	**VISTA SL-213**	24 V	1300	2X700	2800	**P111418 00002**
P960501 00002	**VISTA SL-214**	24 V	1400	2X750	3000	**P111419 00002**
P960523 00002	**VISTA SL-215**	24 V	1500	2X800	3200	**P111420 00002**
P960524 00002	**VISTA SL-216**	24 V	1600	2X850	3400	**P111421 00002**
P960525 00002	**VISTA SL-217**	24 V	1700	2X900	3600	**P111422 00002**
P960526 00002	**VISTA SL-219**	24 V	1900	2X1000	4000	**P111423 00002**
P960527 00002	**VISTA SL-221**	24 V	2100	2X1100	4400	**P111424 00002**
P960528 00002	**VISTA SL-223**	24 V	2300	2X1200	4800	**P111425 00002**
P960529 00002	**VISTA SL-225**	24 V	2500	2X1300	5200	**P111426 00002**
P960530 00002	**VISTA SL-227**	24 V	2700	2X1400	5600	**P111427 00002**
P960531 00002	**VISTA SL-229**	24 V	2900	2X1500	6000	**P111428 00002**

NOTE:
- for natural aluminium guards, give the anodised guard codes with 00001 instead of 00002.
- for right side version give the left side codes with 00004 instead 00002

ACCESSORIES RANGE

CODE	DESCRIPTION
N733408	ERV - VISTA UNIT ASSEMBLY
D113722	VISTA SEL - MODE PROGRAMMER
P111442	BBV - BATTERY-POWERED PANIC DEVICE
P111445	SBV - ANODIZED SUPPORTING BEAM FOR LINEA
P111404	SEAGLE 2 - BI-DIRECTIONAL MICROWAVE RADAR
P111403	EAGLE 1 - MONO- AND BI-DIRECTIONAL MICROWAVE RADAR
P111402 00001	ACTIVE 8 - MICROWAVE RADAR WITH IR SAFETY CURTAINS
P111406	SPOTFINDER - INFRARED DETECTOR
P111405	REMOTE CONTROL
P111325	RIP - INFRARED RADAR
P111265	FPA1 - PHOTOCELL MANAGEMENT SYSTEM WITH 1 PAIR OF SENSORS
P111266	FPA1 - PHOTOCELL MANAGEMENT SYSTEM WITH 2 PAIRS OF SENSORS
N999305	MOBILE LEAF SEALING BRUSH PACK

ASSEMBLY KITS

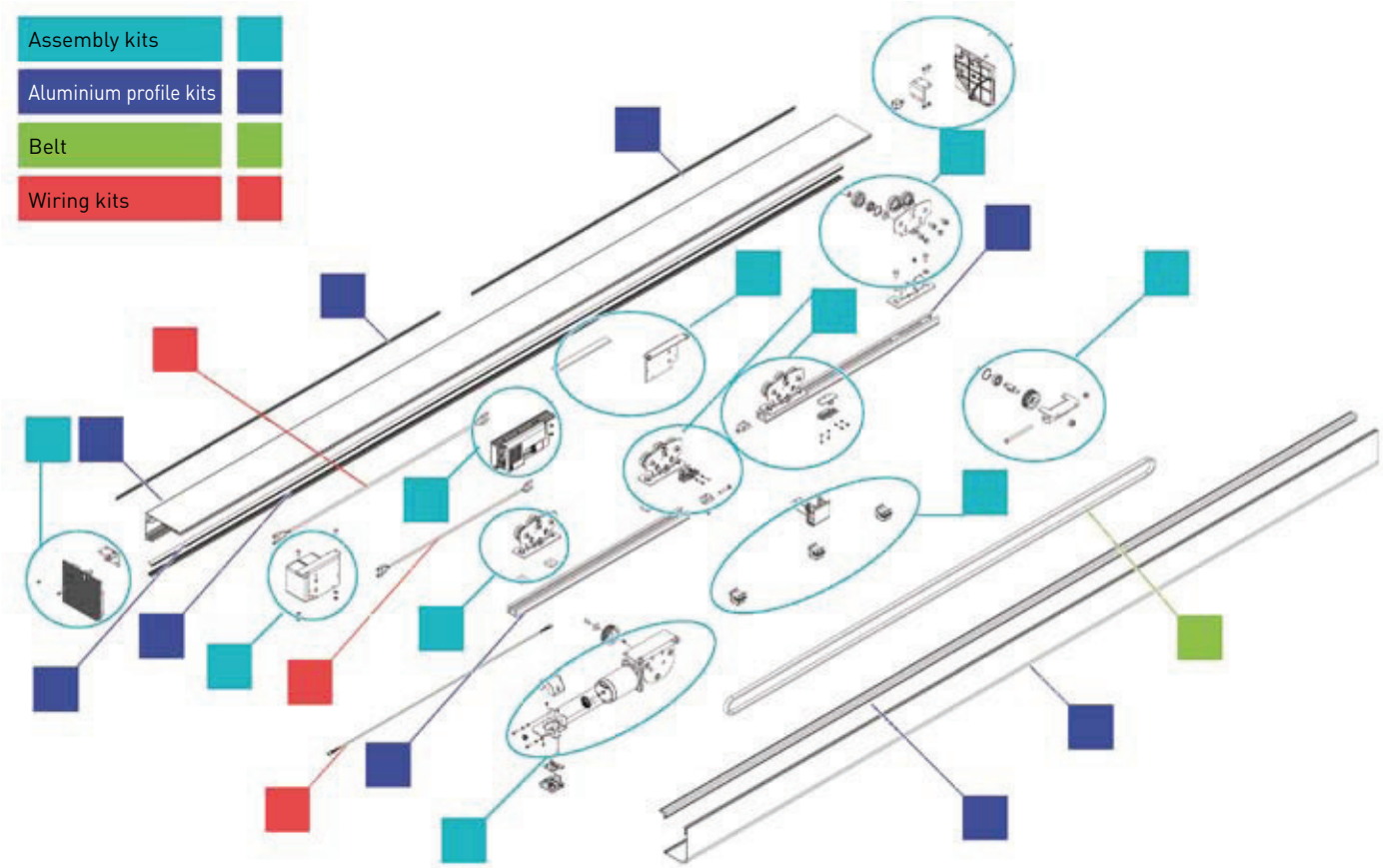

CODE	DESCRIPTION
P960536 00002	230V 2-LEAF VISTA2 ASSEMBLY KIT
P960535 00002	230V 1-LEAF VISTA1 ASSEMBLY KIT
P960533 00002	ANOD. ALUMINIUM PROFILE KIT, 4.2 M LONG
P960534 00002	ANOD. ALUMINIUM PROFILE KIT, 6.5 M LONG
P960533 00001	NATURAL. ALUMINIUM PROFILE KIT, 4.2 M LONG
P960534 00001	NATURAL. ALUMINIUM PROFILE KIT, 6.5 M LONG
P111447	WIRING KIT VISTA SL MOD 107-125 E 212-229
P111448	WIRING KIT VISTA SL MOD 208-211
D191099	VISTA SL BELT KIT- 30 MT PACK

COMPONENTS AND ACCESSORIES

SASAM1 - SASAM 2

Breakout door device enabling door leaves to be pushed open even when the door is closed. Complete with safety contacts that prevent the door from being driven by the motor when door leaves are "

SASAM-1 designed for use with single-leaf doors (maximum opening width 1100mm)
SASAM-2 designed for use with two-leaf doors (maximum opening width 2200mm)

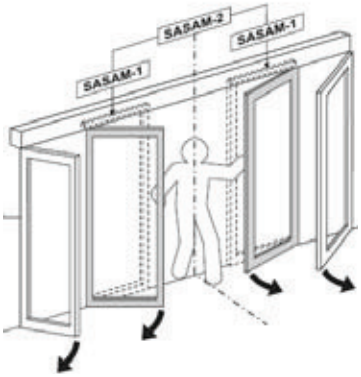

PPA
Aluminium clamp for tempered glass doors with no frame

MODEL	mm	CODE
MOD. 107	10	P111159 00001
	12	P111159 00063
MOD. 108	10	P111159 00002
	12	P111159 00064
MOD. 109	10	P111159 00003
	12	P111159 00065
MOD. 110	10	P111159 00004
	12	P111159 00066
MOD. 111	10	P111159 00005
	12	P111159 00067
MOD. 112	10	P111159 00006
	12	P111159 00068

MODEL	mm	CODE
MOD. 113	10	P111159 00007
	12	P111159 00069
MOD. 114	10	P111159 00008
	12	P111159 00070
MOD. 115	10	P111159 00009
	12	P111159 00071
MOD. 116	10	P111159 00010
	12	P111159 00072
MOD. 117	10	P111159 00011
	12	P111159 00073
MOD. 119	10	P111159 00012
	12	P111159 00074
MOD. 121	10	P111159 00013
	12	P111159 00075
MOD. 123	10	P111159 00014
	12	P111159 00076
MOD. 125	10	P111159 00015
	12	P111159 00077
MOD. 208	10	P111159 00016
	12	P111159 00078
MOD. 109	10	P111159 00017
	12	P111159 00079
MOD. 210	10	P111159 00018
	12	P111159 00080
MOD. 211	10	P111159 00019
	12	P111159 00081

MODEL	mm	CODE
MOD. 212	10	P111159 00020
	12	P111159 00082
MOD. 213	10	P111159 00021
	12	P111159 00083
MOD. 214	10	P111159 00022
	12	P111159 00084
MOD. 215	10	P111159 00023
	12	P111159 00085
MOD. 216	10	P111159 00024
	12	P111159 00086
MOD. 217	10	P111159 00025
	12	P111159 00087
MOD. 219	10	P111159 00026
	12	P111159 00088
MOD. 221	10	P111159 00027
	12	P111159 00089
MOD. 223	10	P111159 00028
	12	P111159 00090
MOD. 225	10	P111159 00029
	12	P111159 00091
MOD. 227	10	P111159 00030
	12	P111159 00092
MOD. 209	10	P111159 00031
	12	P111159 00093

PROFILES

ASSEMBLY OF FIXED DOOR SYSTEM

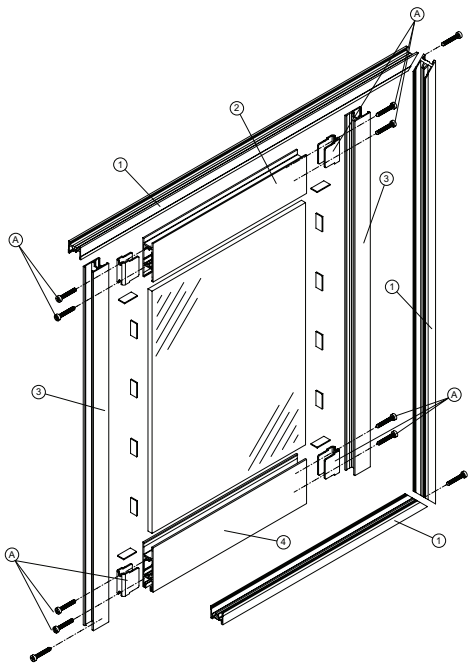

ASSEMBLY AND INSTALLATION OF SLIDING DOOR

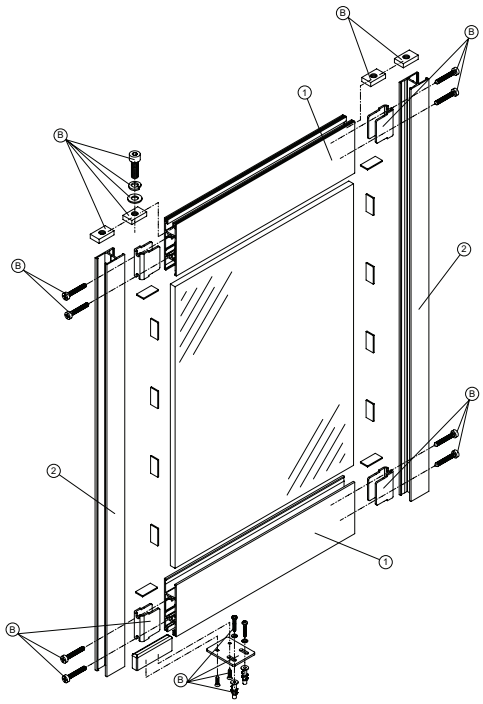

ASSEMBLY OF DOUBLE FIXED DOOR SYSTEM

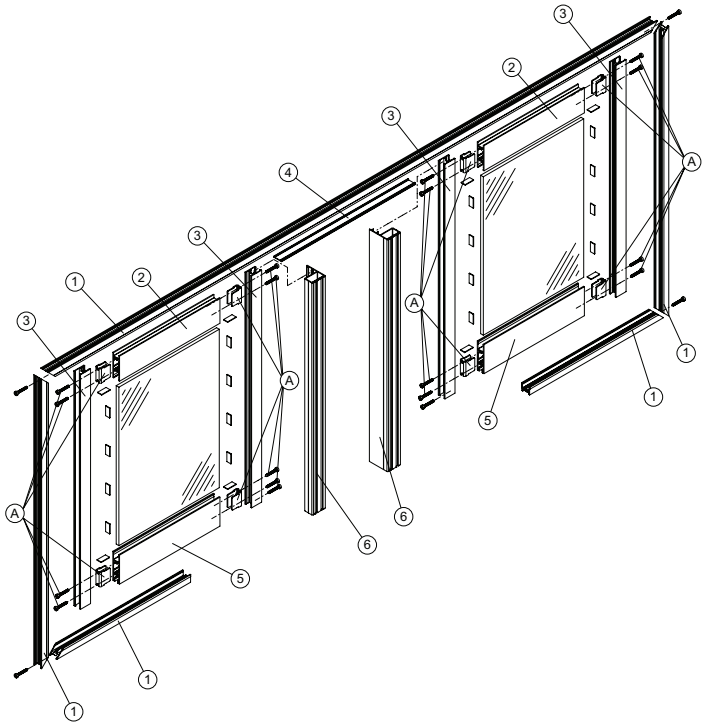

NOTES
- Channel sections are supplied in 5m lengths and weatherstripping in 30m rolls.
- The 20 mm contours are not suitable with the SASAM antipanic system.
- The 20 mm contours are available also painted uron request.
- The profiles are availables in assembly kits. Call BFT for more information.

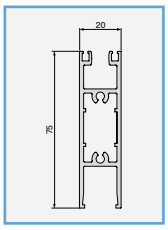

Top profile for bottom mobile leaf, fixed and mobile leaf.

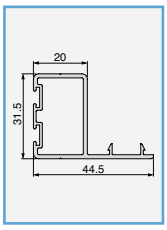

Edge profile / photocell holder.

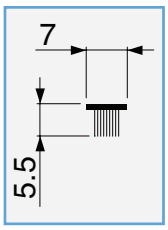

Side sealing brush pack.

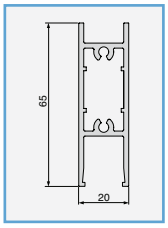

Top profile for fixed leaf.

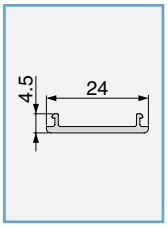

Latch profile.

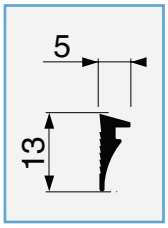

Glass stopper seal pack.

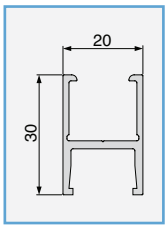

Jamb profile.

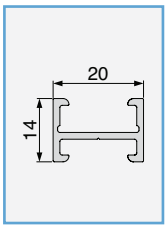

Weather strip profile.

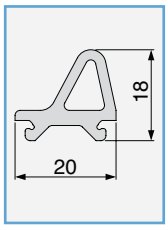

Leaf latch seal pack.

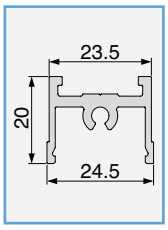

Frame profile.

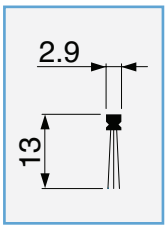

Mobile leaf sealing brush pack.

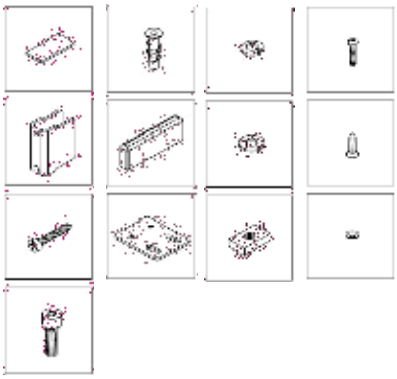

Accessory pack for assembling 1 mobile leaf. See drawing (B)

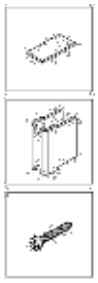

Accessory pack for constructing 1 fixed leaf. See drawing (A)

EAGLE ONE - SEAGLE TWO
MICROWAVE PRESENCE DETECTORS

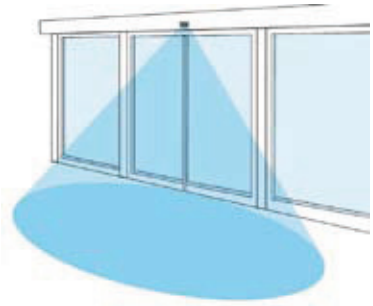

Example of installation

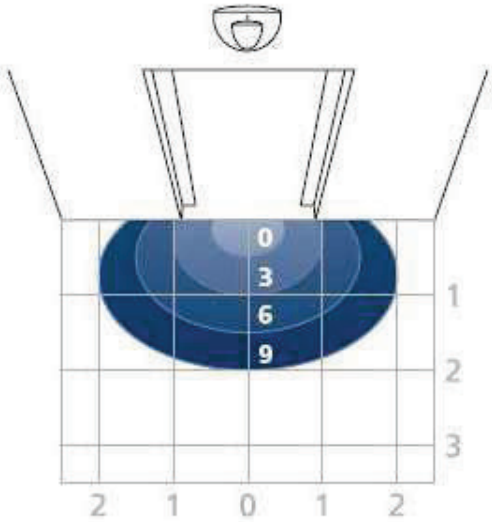

Detection range based on sensitivity adjustment

- Mono- and/or bi-directional detector
- Universal motion detector for automatic doors with high energy efficiency .
- K-band planar antenna specifically designed for automatic doors
- Digital electronics controlled by a powerful microprocessor
- Very wide detection lobe to provide the user with the best possible comfort and good side motion detection on approach
- "3D" adjustment: the antenna can be rotated along both axes:
- Front adjustment: from 0° to 90°
- Side adjustment: from 30° on left to 30° on right!
- Can be fitted as high up as 4 m (up to 3 metres for SEAGLE TWO)
- Strong ABS casing
- Programming via REMOTE CONTROL (for EAGLE only)

TELECOMANDO

Instrument employed to program the EAGLE sensor by adjusting:
- Sensitivity
- Programming mode
- Immunity
- Relay output configuration

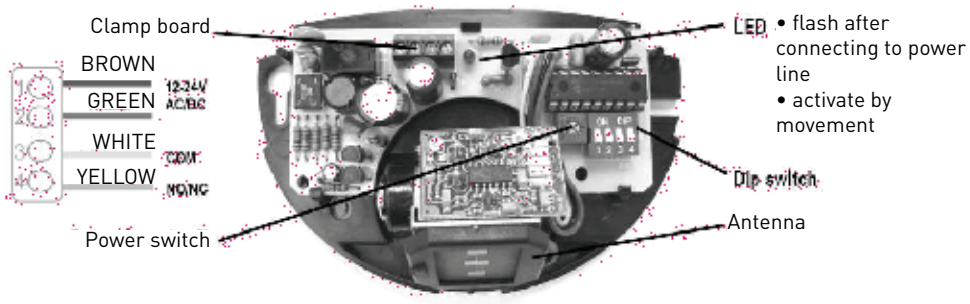

Structure, connection and adjustment

ACTIVE8 TWO PB - COMBINED MICROWAVE-INFRARED DETECTOR

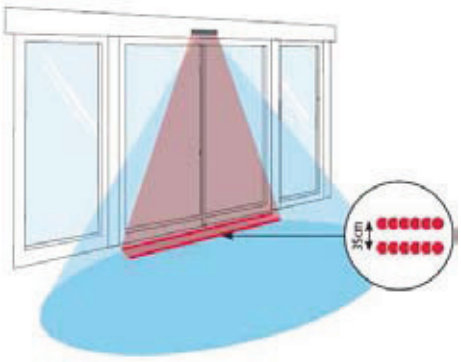

Example of installation

- Hyperfrequency and active infrared combined in a single unit
- Numerical electronics
- Motion detection for one-way opening (detection on approach)
- Presence detection provided by a double IR curtain, each comprising 24 interlaced spots so as to assure even, reliable detection
- Simplified settings courtesy of pre-programmed configurations

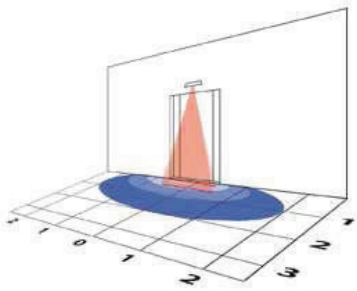

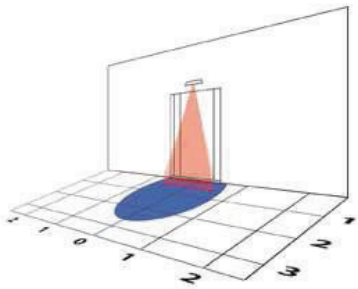

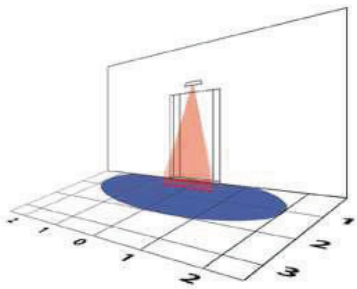

Detection ranges that can be achieved based on sensitivity settings, tilt and antenna type.

SPOTFINDER

- Instrument used to detect the exact position of the infrared sfety curtains

Structure, connections and adjustment

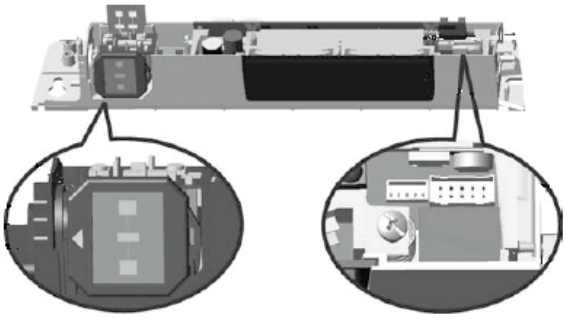

RIP - FPA - INFRARED AND PHOTOCELL PRESENCE DETECTORS

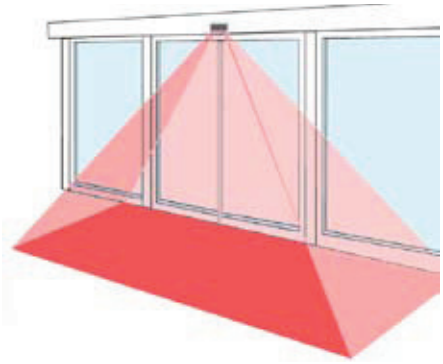

Example of installation

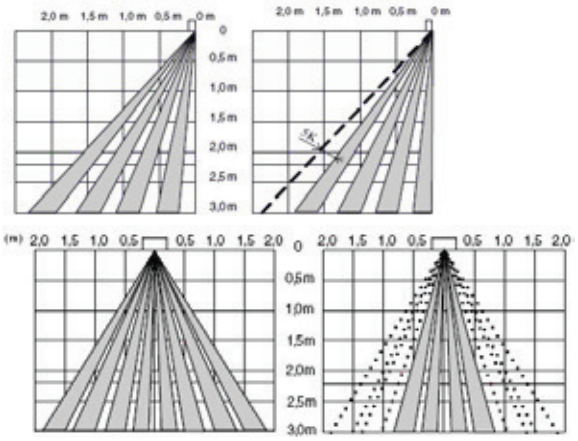

Detection ranges based on adjustments

RIP

- Infrared presence detector
- Installation height up to 3 metres
- Double changeover output contact (NO/NC)
- Snow mode management
- Work frequency setting so that a number of sensors can be used close to each other without interference

FPA 1 - FPA 2

- Recessed safety photocells for automatic pedestrian doors
- Safe, accurate operation by virtue of "microprocessor" technology
- Extremely small optics (12.4 mm in dian and 10 mm deep) for "concealed" install Maximum range up to 10 metres
- Double output contact (NO/NC)

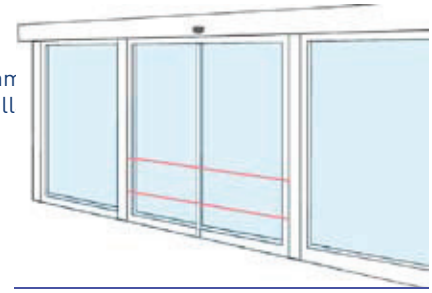

Example of installation

SPECIFICATIONS

VISTA SL
Electromechanical automation for sliding doors

- with double and/or single leaf
- maximum weight 120+120 kg for double leaf
- maximum weight 150 kg for single leaf
- door opening width in range 750 to 2550 mm for single leaf
- door opening width in range 800 to 2900 mm for double leaf

Structure
- load-bearing header in extruded aluminium
- maximum overall dimensions 155x166mm
- shaped extruded aluminium cover fitted on shock-absorbing rubber hinge. Comes in natural or anodized
- galvanized steel cover locking lever with double locking position
- extruded aluminium track fitted on shock-absorbing bearing
- driven pulley with belt tensioning system and safety lock

Drive
- 24Vac synchronous motor with built-in optical encoder
- electric system stopping door opening motion

Management and control unit
- microprocessor-based control unit ARIA
- programming via display and buttons
- mode selection via VISTA SEL
- digital selector 433Mhz rolling-code radio-receiver supplied as standard

Main settable functions
- Automatic closing (0-60 sec)
- Time-to-clear (1-99 sec)
- Partial opening (10-70%)
- Partial lock opening (3-30 cm)
- Alarm time (1-90 sec)
- Acceleration (1-10)
- Brake (1-10)
- Opening deceleration distance (10-70 cm)
- Closing deceleration distance (10-70 cm)
- Opening slow-down distance (10-20 cm)
- Closing slow-down distance (10-20 cm)
- Opening speed (1-99%)
- Closing speed (1-99%)
- Opening torque (1-99%)
- Closing torque (1-99%)
- Zones (0-127)
- Door mode (0-6)
- Radar enabling (0-2)
- Emergency input (0-3)
- Buzzer (0-3)
- Lock type (0-5)
- Door alarm output (0-1)

Automatically set functions
- Acceleration
- Brake
- Opening deceleration distance
- Closing deceleration distance
- Opening slow-down distance
- Closing slow-down distance
- Opening speed
- Closing speed
- Opening torque
- Closing torque
- Safety operation testing

Available modes
- Programming unrestricted or protected by magnetic key
- Activate internal radar
- Activate external radar
- Activate internal and external radars
- Deactivate radar
- Normal mode
- Door closed at night
- Door closed by day
- Total opening
- Partial opening
- Partial open
- Partial lock opening

Safety devices
- electronic management of anti-crush feature
- dynamic monitoring of torque curve
- encoder-managed electronic anti-burglary system

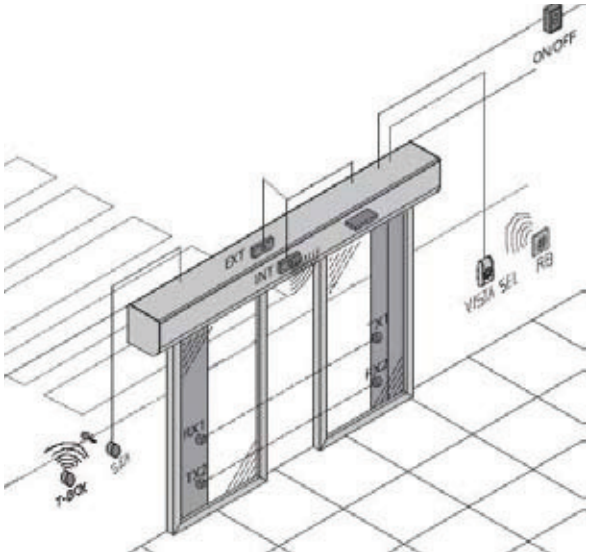

EXAMPLE OF A COMPLETE SYSTEM

- VISTA SL automatic sliding door
- VISTA SEL mode selector
- SEK reinforced key switch for exterior use
- T-BOX wireless numerical keypad
- RB 4-channel wireless wall button
- EXT - INT pair of presence detectors
- TX - RX safety photocells